6P-II Operating and Maintenance Manual

BU-6PII-OM-01 | REVISION 3 | 20 OCTOBER 2026

Oxygen acetylene powder flame spray system



For the Balaji Udhyog 6P-II system with a 220 V AC single-phase feeder/control supply. This manual covers installation checks, K/M nozzle reference data, manual operation, shutdown, maintenance, fault finding and replacement-parts identification.

Before operation: Only trained personnel may commission or operate this system. Do not light the gun until gas identity, pressure/flow measurement basis, carrier-gas setting, cooling air, extraction, safety devices and the job recipe have been checked and signed off.

Scope and limitations

This manual does not authorize LPG, CNG or hydrogen conversion, does not certify a coating recipe, and does not replace the powder safety data sheet or the instructions for the actual feeder, regulator, flashback arrestor and controller. Automatic operation and electrical internal repairs require their equipment-specific instructions.

Balaji Udhyog
Plot No. 75, Hastinapur Nagar, Sangariya, Jodhpur, Rajasthan 342013, India
+91 92692 88805 | sales@balajiudyog.in
www.buspray.com

Contents and equipment identity

READ BEFORE COMMISSIONING

Section	Page
Equipment identity and document use	2
Safety and site controls	3
System layout and connections	4
Installation and commissioning	5
Nozzle selection and reference parameters	6
Powder feed and coating qualification	7
Manual startup and spraying	8
Shutdown and emergency response	9
Routine maintenance	10
Front end and seals	11
Gas valve service	12
Troubleshooting	13
Replacement parts - front end	14
Replacement parts - valve and handle	15
Replacement parts - controls and accessories	16
Service log and commissioning record	17
Technical basis and support	18

Identify the actual assembly

Model markings 6P-II and 6PM-II appear in the supplied technical material. This document uses 6P-II as the system name and retains 6PM-II catalogue references in the parts list. Match the physical part and current Balaji SKU before ordering; the prefixes do not by themselves prove interchangeability.

K and M nozzles are both used by Balaji Udhyog. Select the complete front-end combination for the powder. Do not assume that changing only the nozzle leaves the carrier gas, air cap or spray recipe unchanged.

Expanded construction, service charts, detailed parts and the complete spray-table appendix follow page 18. See the expanded index on page 19.

Safety and site controls

QUALIFIED OPERATORS ONLY

• Use an engineered spray booth and extraction system suited to the actual metal/ceramic dust and fumes. Confirm airflow before ignition. Have a competent specialist select the dust collector, grounding and fire/explosion protection; do not assume every metal dust is safe in a wet collector.

• Review the powder safety data sheet and site exposure assessment. Provide suitable respiratory protection, eye/face protection, hearing protection, flame-resistant clothing and gloves. Assess protection for nearby personnel as well as the operator.

• Secure gas cylinders upright and protect them from heat, impact and the spray stream. Use gas-specific regulators, hoses and correctly rated protective devices. A non-return valve alone is not a flashback arrestor.

• Keep oxygen components, hands and gloves free of oil and grease. Do not use general-purpose oils, thread compounds or sealants in oxygen service. Use only explicitly approved oxygen-compatible service materials.

• Do not exceed 15 psig / approximately 1.03 bar gauge acetylene use pressure. Use lower limits where required by the installed equipment or local rules. Confirm cylinder/manifold withdrawal capacity for continuous demand.

• Never use a flame to find leaks. Never use compressed air to purge oxygen or fuel hoses. Nitrogen can displace oxygen: prevent accumulation and provide adequate ventilation.

• Keep the flame away from hoses, cylinders, cables and combustible material. Use a safe gun rest. Keep escape routes and supply isolation valves accessible.

• Isolate power and gas, release trapped pressure safely and allow cooling before service. Never open a pressurized feeder canister. Do not bypass interlocks or pressure relief devices.

Stop conditions

For a pop/backfire, sustained hiss, internal burning, gas leak, loss of carrier/cooling air, or failed extraction: stop powder and close the torch gas valve immediately if safe. Isolate supplies from a safe location. If a fire or leaking cylinder cannot be safely isolated, evacuate and call the site's emergency team. Do not relight until the cause has been corrected and the equipment checked by a competent technician.

Gas-safety reference: OSHA 29 CFR 1910.253. Apply the regulations and equipment instructions for the actual installation country; this document is not a compliance certificate.

System layout and connections

IDENTIFY CONNECTIONS BY MARKING

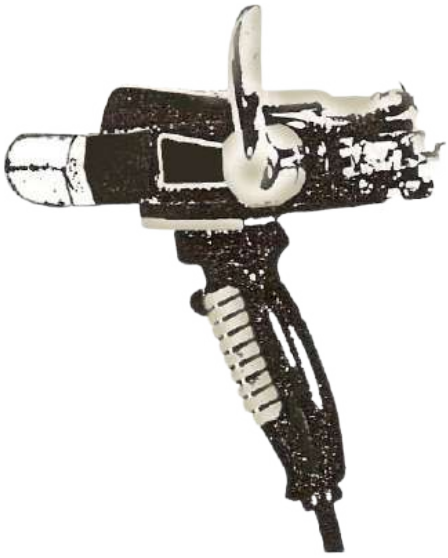

Service	Functional connection
Oxygen	Approved regulator and protective devices -> oxygen flow/control circuit -> gun oxygen inlet
Acetylene	Approved regulator and protective devices -> fuel flow/control circuit -> gun fuel inlet
Carrier gas	Approved regulator -> powder feeder -> powder delivery hose -> gun powder inlet
Cooling air	Clean dry regulated air -> air control -> gun air connection
Electrical control	220 V single-phase supply -> compatible feeder/control equipment -> gun/remote feed control

Connection illustration from the supplied 6PM-II parts material. Confirm actual inlet stamps and hose specifications. The reference fuel fitting is left-hand threaded; do not identify a gas only by hose colour or force mismatched threads.

The gun's combined gas valve controls oxygen and fuel, not the cooling-air supply. Carrier flow and gun cooling must be established before ignition and maintained while the flame is lit.

Installation and commissioning

INSTALLATION ACCEPTANCE CHECKS

1. Locate the feeder and controls outside the direct spray plume. Support the torch and hoses without strain, sharp bends or contact with hot surfaces. Verify the booth, work handling and emergency access.

2. Have a qualified person connect the correct gas-specific regulators and safety devices. Confirm pressure ratings, gas identity, supply cleanliness and continuous-flow capacity. Do not improvise adapters.

3. Connect oxygen and acetylene to their labelled circuits. Confirm each joint and hose is serviceable. Carry out the approved gas-specific leak test and controlled purge procedure before ignition.

4. Connect the approved carrier gas to the feeder and powder hose to the torch. The reference system uses nitrogen; the actual carrier selection, purity and regulator setting must be approved for the installed feeder and powder.

5. Connect clean, dry, oil-free air to the air-control unit. Inspect filters and drains. Verify gun-cooling flow and any separate cooling wand or vibrator connections.

6. Verify 220 V AC single-phase equipment nameplates, supply frequency, protective earth, circuit protection and the control cable wiring. Do not connect an older 115 V component directly to this supply.

7. Inspect and fit the selected nozzle, matching siphon plug and air cap. Verify sealing surfaces and hand-tight assembly. Confirm nozzle marking against the job sheet.

8. With powder feed OFF, test control functions and, where fitted, emergency stop, flame supervision and gas/air interlocks using the approved commissioning procedure.

9. Complete a controlled ignition, flow check and test coupon. Record the accepted settings and results on the commissioning sheet. Release the installation only after technical approval.

Automatic and semi-automatic variants

Use the actual controller's approved wiring, purge, ignition, flame-failure and shutdown sequence. This manual's hand-operated combined-valve lighting steps must not be substituted for a controller sequence.

Nozzles and reference parameters

K AND M ARE NOT ONE UNIVERSAL RECIPE

Parameter	M nozzle reference	K nozzle reference
Oxygen pressure	2.2 bar (31.9 psi)	2.1 bar (30.5 psi)
Acetylene pressure	1.00 bar (14.50 psi)	1.00 bar (14.50 psi)
Oxygen consumption / flow	2.7 m³/h (45 L/min)	2.2 m³/h (36.7 L/min)
Acetylene consumption / flow	1.7 m³/h (28.3 L/min)	1.3 m³/h (21.7 L/min)
Gun cooling air	10-15 psi (0.69-1.03 bar), for the standard gun-cooling cap	Same cap-specific reference; auxiliary jets require a separate setting
Electrical supply	220 V AC, single phase	220 V AC, single phase

Reference values are not a universal coating recipe. M gas values align with the Balaji brochure and reference M rows. K values come from selected reference K ceramic rows, not a Balaji-tested recipe. Approve the actual powder grade, nozzle, siphon plug, air cap, carrier gas and meter calibration before use. Do not set both pressure and flow independently to arbitrary targets.

Selecting the front end

The reference tables use M for many metallic and self-fluxing powder examples, and K for several ceramic examples. These are selection clues only. Use the powder's actual grade and particle-size specification; no automatic equivalence with another supplier's powder number is established.

Air cap arrangement

Use the standard gun-cooling cap unless the approved recipe requires a pinch/cool cap. The standard cap is not reversible. For the reversible cap, P faces outward for pinch action and C outward for cooling action. Do not use pinch air for ceramic powders unless explicitly approved for that process.

The 10-15 psi reference is only for standard gun cooling. Auxiliary air jets, pinch/cool cap settings and carrier gas have separate functions and must not be assigned that same pressure. 15 psi equals approximately 1.03 bar, not 0.35 bar.

Powder feed and process qualification

CONTROL ACTUAL MASS FLOW

Prepare the material

Use the specified thermal spray powder and its safety data sheet. Verify composition, particle size, batch, storage condition and dryness. Do not mix powders or return contaminated overspray to the feeder. Follow the feeder procedure for loading only after isolation and verified depressurization.

Calibrate before spraying

Feeder RPM is not a universal kg/h setting. With the approved cold calibration arrangement and suitable containment, collect powder for a measured interval and weigh it. Establish a repeatable rate for the actual powder, disc, hose and carrier-gas setting.

Feed rate in kg/h = collected powder in grams × 3.6 ÷ collection time in seconds.
Example: 50 g in 60 s gives 3.0 kg/h. This is a calculation example, not a recommended 6P-II feed setting.

Reference performance only

Family	Published example	Meaning
Ceramic	0.9 kg/h; 25-75% deposition efficiency	Depends on material and configuration
Metallic	2.7 kg/h; 80-90%	Not a common setting for all metal powders
Self-fluxing	9.1 kg/h; 85-95%	Fusing, if required, is a separate qualified process

Qualify a coupon

Specify surface cleanliness, roughness and any bond coat. Establish spray distance, traverse speed, overlap, rotation, preheat and maximum substrate temperature from the qualified process. Monitor temperature during spraying. Check thickness, adhesion and any required hardness, porosity or finish before production.

Do not convert old flowmeter scale numbers directly into L/min. Rotameter readings depend on gas, calibration and operating pressure. No generic carrier pressure, disc RPM or spray distance is approved by this manual.

Manual startup and spraying

MANUAL COMBINED-VALVE CONFIGURATION

1. Confirm the approved job sheet: powder grade and size, K or M nozzle, matching siphon plug, air-cap orientation, carrier gas, flows, spray distance and temperature limit. Do not substitute a nozzle while retaining the previous recipe.

2. Inspect the cold, isolated gun. Nozzle and siphon plug must be clean, seals undamaged, the plug seated and the nozzle nut/air-cap body hand-tight. Keep the powder feed OFF.

3. Start extraction and confirm its airflow indication. Secure the workpiece and point the gun into the booth away from people, hoses and combustibles. Put on the site-specified eye/face, hearing, respiratory and flame-resistant protection.

4. Verify gas circuits and protective devices. A trained operator performs the approved leak test and individual line purge into a safe ventilated location. Never test leaks with flame or blow fuel/oxygen hoses out with compressed air.

5. Enable the 220 V single-phase control/feeder supply only after nameplate, protective earth and protection checks. Establish the approved carrier-gas flow through the gun and the required cooling air before ignition.

6. For the manual combined-valve gun only, move the gas valve to its lighting detent. Ignite with the approved spark lighter at the nozzle. On stable ignition, move the valve to the full operating position and verify the approved gas flows. If ignition fails or is abnormal, close the valve and follow the safe purge/restart procedure; do not keep releasing unburned gas.

7. With a stable flame and correct flows, start powder feed and make a test coupon. Check spray pattern, actual powder feed rate, workpiece temperature and coating acceptance before coating the production component.

During spraying

Keep the approved stand-off and steady traverse. Avoid dwelling on one spot. Monitor gas stability, cooling/carrier flow, feed consistency and substrate temperature. Pause before the temperature limit is reached. If changing powder or nozzle, stop, isolate, cool and requalify the recipe.

Shutdown and emergency response

NORMAL STOP AND SAFE ISOLATION

1. Switch powder feed OFF. Follow the feeder's approved line-clearance sequence while maintaining carrier gas and cooling air; do not interrupt carrier gas while the flame is lit.

2. Close the gun's combined gas valve to extinguish the flame. Verify flame-out. Maintain cooling/carrier flow for the equipment's specified cooling period; no universal delay is assigned here.

3. For an extended stop, close gas supplies and isolate electrical power. A trained operator releases trapped pressure by the approved separate-circuit procedure with extraction running, then leaves controls closed and regulators unloaded as specified by their manufacturer.

4. Allow parts to cool. Isolate, lock out and verify zero pressure before removing a nozzle, hose, feeder lid, seal or valve. Clean and record any defect before the next shift.

Backfire or flashback

For a pop/backfire, sustained hiss, internal burning, gas leak, loss of carrier/cooling air, or failed extraction: stop powder and close the torch gas valve immediately if safe. Isolate supplies from a safe location. If a fire or leaking cylinder cannot be safely isolated, evacuate and call the site's emergency team. Do not relight until the cause has been corrected and the equipment checked by a competent technician.

Loss of services

If cooling air, carrier gas, extraction or a required electrical control fails, stop spraying and isolate combustion gases by the approved safe method. Do not assume an electrical power failure automatically closes a manually controlled gas valve.

Return to service

Determine the cause, inspect the nozzle, siphon plug, seals, hoses, protective devices and controls as appropriate. Replace damaged parts, repeat leak/functional checks and obtain technical release. Repeated ignition attempts are not a fault-finding method.

End of shift

Store powder sealed and identified. Leave the gun clean and cool, hoses supported, supplies isolated and the work area free from unsafe dust deposits. Record the job settings, abnormal events and corrective work.

Routine maintenance

SERVICE ONLY AFTER ISOLATION

When	Inspection and action
Before each shift	Check hoses, fittings, seals, nozzle seating, air filters, control cable, protective devices and extraction indication.
At powder or nozzle change	Check compatibility; clean feed path by the approved procedure; inspect O-rings and seating faces; repeat feed calibration as required.
During planned stops	Inspect nozzle-tip build-up and spray pattern. Isolate and cool before cleaning. Never touch or dismantle a hot operating torch.
After use	Remove loose powder by a dust-safe approved method. Store gun and powder dry; protect open connections.
After backfire or overheating	Remove from service. Inspect front-end jets, O-rings, nozzle nut and siphon plug; inspect safety devices as required before restart.
Periodic service	Follow component-specific intervals for regulators, arrestors, hoses, electrical controls, feeder and extraction. Record service and replacements.

Cleaning rules

• Use the correct cleaning wires without enlarging or rotating them in a jet. Do not drill or ream nozzle or siphon passages.

• Use compatible cleaning agents specified for the actual seals and oxygen-service components. Never soak O-rings in solvent.

• Use clean dry compressed air only where the approved component-cleaning procedure allows it and dust is safely contained. Do not blow accumulated powder into the workplace.

• Use only a thin amount of the specifically approved service lubricant where required. Do not replace a named oxygen-service lubricant with ordinary oil or grease.

Maintenance record

Record date, operating hours if available, symptom, inspected parts, replacement part/lot, lubricant used, checks completed and technician approval.

Front end and seals

NOZZLE | SIPHON PLUG | AIR CAP

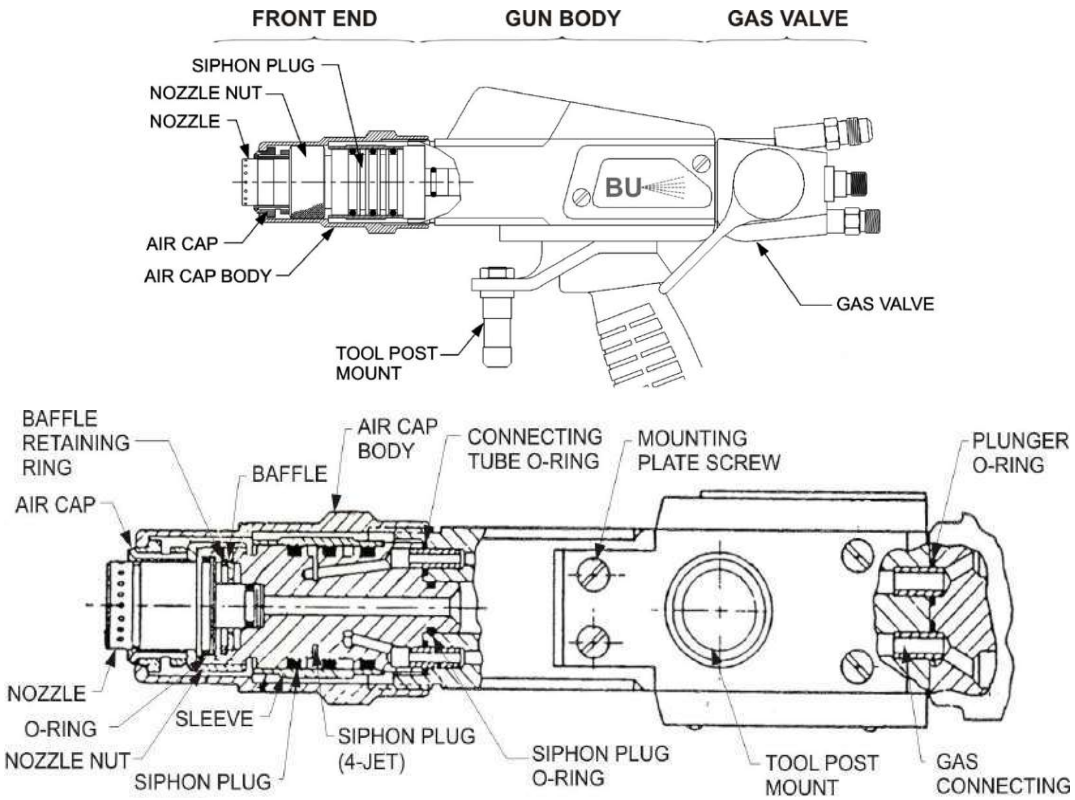

1. Isolate electricity and gases, verify zero pressure, cool the torch and clean the exterior on a clean bench.

2. Remove the air-cap body and cap, then release the nozzle nut by hand. Preserve the identified nozzle and seal arrangement. Do not use force on damaged threads.

3. Inspect nozzle jets, siphon plug passages, O-ring grooves and mating faces. Replace cut, hardened, swollen or heat-damaged seals with the correct specification.

4. If the siphon plug is removed, align its locating dowel and gas-tube holes during reassembly. Seat its flange fully against the clean gun-body face. Confirm the baffle/retainer is correctly seated.

5. Reinstall the selected nozzle, nut and correct air cap; hand-tighten as specified. Repeat the approved leak and functional checks before relighting.

Internal section illustrations are identification aids, not machining drawings. Do not infer missing dimensions, torque values or seal material from them.

Gas valve service

COMPETENT SERVICE PERSONNEL ONLY

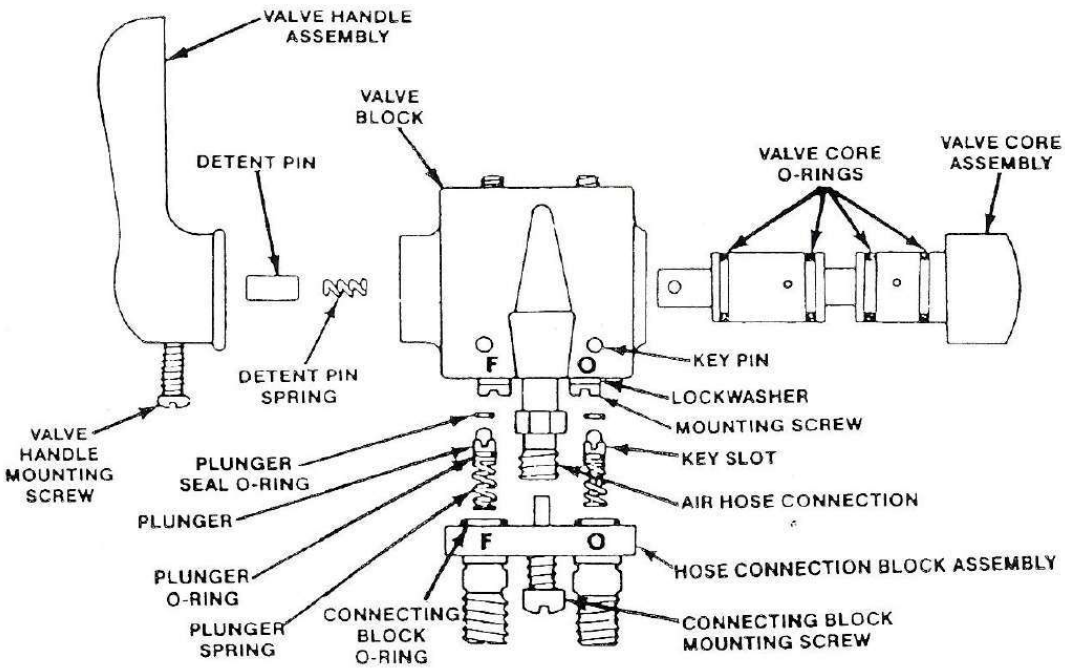

The manual valve uses a valve core, plungers, springs and seals to control oxygen and acetylene. A leaking valve or abnormal lighting flow must be removed from service; do not compensate by increasing pressure.

1. Complete isolation, depressurization and cooling. Clean the outside before opening the valve.

2. Follow the exact valve revision's service instructions. The supplied reference identifies the hose connection block as the first part removed before internal valve disassembly.

3. Inspect the core, seal seats, plungers, springs and detent components. Use only correct replacement seals and approved oxygen-service cleaning/lubrication materials.

4. During reassembly, each plunger key slot must engage its locating pin. Match oxygen/fuel markings on the block and body. Never force a misaligned block or plunger.

5. A competent technician must perform the approved pressure-integrity, cross-leak and functional checks before returning the torch to service.

No valve test-pressure or proprietary flowmeter-scale test is prescribed here. Use the approved service procedure for the installed valve and calibrated instruments.

Troubleshooting

ISOLATE BEFORE INSPECTION

Symptom	Checks after safe shutdown	Required response
No ignition / unstable lighting	Gas supply, correct valve detent, carrier flow, blocked or damaged jets, incorrect front end	Close gases after a failed attempt; follow approved purge and investigate before retrying.
Pop / backfire / internal hiss	Nozzle/siphon jets, seals, seating, overheating and gas imbalance	Stop immediately; inspect and obtain technical release.
Flame lifts from nozzle	Incorrect lighting position, flows or front-end combination	Stop; verify the approved settings and assembly.
Powder feed absent or pulsing	Powder level/condition, feeder drive, carrier gas, hose blockage, compatible vibrator if fitted	Depressurize before opening; clean and recalibrate.
Gun overheats	Cooling air, cap orientation, blockage or internal burning	Stop; do not resume without restored cooling and fault clearance.
Workpiece overheats	Stand-off, dwell, feed rate, auxiliary cooling and process temperature limit	Pause and revise the qualified process; do not quench blindly.
Poor coating / excess overspray	Powder match, substrate prep, nozzle, feed calibration, angle and distance	Test coupon and technical review before continuing production.
Gas leak or regulator creep	Damaged seal/hose/regulator or incorrect fitting	Isolate supplies; replace/service faulty equipment. Never use flame to test.
Electrical feed control fails	220 V compatibility, earth/protection, switch and cable condition	Isolate power; qualified electrical technician only.

Do not defeat interlocks, substitute seal materials or increase acetylene pressure to overcome a fault. Stop and contact Balaji Udhyog if the correct configuration cannot be established.

Replacement parts Front end

6PM-II REFERENCE NUMBERS | MATCH CURRENT BALAJI SKU BEFORE ORDERING

Reference	Description
6PM-II-3	Reversible pinch/cool air cap
6PM-II-4	Gun-cooling air cap
6PM-II-7C-K	K nozzle
6PM-II-7C-M	M nozzle
6PM-II-24	Gas-connecting-tube O-ring
6PM-II-36	Air cap
6PM-II-40	Gun body assembly
6PM-II-72	Gas connecting tube
6PM-II-79	Siphon plug rear O-ring
6PM-II-80	O-ring; confirm location and revision
6PM-II-81	Siphon sleeve O-rings
6PM-II-82	Siphon plug sleeve
6PM-II-84	Baffle retaining ring
6PM-II-117	Air-cap body
6PM-II-169	Top plate
6PM-II-217 / 218	Nozzle assembly seals; application dependent
6PM-II-518	Baffle
6PM-II-525	Nozzle nut
6PM-II-600 / 605	Two-jet / four-jet siphon plug assemblies
6PM-II-645 / 655	M front-end combinations; two-jet / four-jet reference
6PM-II-690	K four-jet front-end combination

Additional nozzle types exist in the reference catalogue but are outside this oxygen-acetylene K/M operating scope. Supply composition and seal quantities must be confirmed against the actual assembly.

Replacement parts Valve and handle

6PM-II REFERENCE NUMBERS | MATCH CURRENT BALAJI SKU BEFORE ORDERING

Reference	Description
6PM-II-5	Gas valve assembly
6PM-II-68	Valve handle mounting screw
6PM-II-77 / 78	Valve mounting screw / lockwasher
6PM-II-92	Valve block
6PM-II-98	Air hose connection
6PM-II-137	Connection block O-ring
6PM-II-187	Valve core assembly
6PM-II-188 / 196	Detent pin / detent spring
6PM-II-189	Valve handle assembly
6PM-II-191	Plunger seal O-ring
6PM-II-192 / 194	Plunger / plunger spring
6PM-II-195	Valve-core O-ring
6PM-II-197 / 199	Hose connection block / mounting screw
6PM-II-280	Gas valve O-ring package
6PM-II-27	Cable plug
6PM-II-281 / 282	Tool post bracket / mounting stud
6PM-II-283 / 284	Nut / lockwasher
6PM-II-285 / 286	Handle mounting plate / gasket
6PM-II-287 / 288	Handle mounting screw / handle screw
6PM-II-289 / 290 / 291	Switch / switch boot / strain relief
6PM-II-510	Control handle assembly

Part number 6PM-II-80 appears in more than one seal description in the supplied material. Confirm the physical seal and location with Balaji before ordering; do not substitute by number alone.

Replacement parts Accessories

6PM-II REFERENCE NUMBERS | MATCH CURRENT BALAJI SKU BEFORE ORDERING

Reference	Description
6PM-II-975	Electrical control box reference; verify 220 V configuration
6PM-II-18 / 19	Switch / boot references; confirm description and revision
6PM-II-26 / 317	Control / powder-feed receptacles
6PM-II-223 / 310	Fuse / fuse holder; rating must match actual equipment
6PM-II-306 / 307	Control box cover / cover screw
6PM-II-318 / 321	Control box mounting screw / legend plate
6PM-II-322	Air vibrator receptacle
6PM-II-330	Optional air-jet assembly
6PM-II-30 / 335	Air nozzle for flat / cylindrical work
6PM-II-251 / 256	Air nozzle hose / supply air hose
6PM-II-253	Air-block hose connector
6PM-II-324 / 326	Right / left pivot block
6PM-II-325	Air-jet head
6PM-II-125 / 299	Tool-post fixture references; confirm assembly contents
6PM-II-243	Tool-post bar
6PM-II-89 / 90	Oxygen-acetylene hose assembly / air hose
6PM-II-101	Powder-feed hose
6PM-II-301 / 302	Oxygen / acetylene hose fitting
6PM-II-126 / 127 / 128	Spark lighter / cleaning brush / cleaning wire kit
6PM-II-400 / 590	Quick-disconnect hose package / remote control cable

This service list covers principal system parts. Obtain the exact current bill of materials for the installed serial number before major overhaul. No fuse rating, thread adaptation or automatic electrical compatibility is implied.

Commissioning and service record

COMPLETE FOR EACH APPROVED CONFIGURATION

Field	Recorded value
Gun serial / feeder serial / controller	_____
Supply voltage / phase / frequency	_____
Powder grade / batch / size	_____
Nozzle / siphon plug / cap orientation	_____
Oxygen pressure / flow / meter ID	_____
Acetylene pressure / flow / meter ID	_____
Carrier type / pressure / flow	_____
Gun air / auxiliary air / vibrator	_____
Feed rate / disc / RPM	_____
Distance / traverse / rotation	_____
Preheat / maximum temperature	_____
Surface preparation / bond coat	_____
Extraction / leak / safety-device checks	_____
Coupon results / acceptance criteria	_____
Operator / approver / date	_____

Service entry

Date: _____ Technician: _____
Fault or planned work: _____
Parts replaced and lot: _____
Leak / functional checks and release: _____

Technical basis and support

DOCUMENT CONTROL AND CUSTOMER ASSISTANCE

Confirmed configuration

Balaji Udhyog confirmed oxygen + acetylene operation, use of both K and M nozzles, and a 220 V single-phase supply on 20 October 2026. These confirmed configuration details take precedence over older generic electrical references.

Document scope

This manual covers the 6P-II system, components, servicing and spray parameters. Match every procedure to the delivered equipment configuration.

Limits of the parameter tables

The M pressure/consumption values are consistent with the Balaji brochure and reference M examples. K values describe selected reference ceramic examples. Meter scale numbers, powder-brand number equivalents, high-rate tables and reference references are included in the expanded appendix, but are not adopted as universal operating instructions. Confirm the exact powder and hardware with technical support.

Safety reference

Gas handling checks also reference OSHA 29 CFR 1910.253, especially acetylene pressure and oxygen cleanliness. Consult the current rules applicable at the installation location and the component manufacturers' instructions.

Installation video

https://youtu.be/Q0ESt9xHWxk

Customer-supplied video link for supplementary viewing. The video content was not independently verified for this edition. A video does not replace the approved commissioning sheet or safety procedure.

Request support with these details

Send the gun/feeder identification, nozzle marking, powder grade and batch, photographs of the assembly and gauges, the operating record and a clear description of the fault. Do not relight equipment that has an unresolved gas leak, internal burning or damaged safety device.

Balaji Udhyog
Plot No. 75, Hastinapur Nagar, Sangariya, Jodhpur, Rajasthan 342013, India
+91 92692 88805 | sales@balajiudyog.in
www.buspray.com

Revision 2 covers the specified manual system. Controller-specific automatic sequences, feeder internal overhaul and electrical wiring diagrams must be supplied for the actual installed components before those tasks are undertaken.

Expanded technical index

CONTENTS 1-24

Section	Page
Gun operating principle	21
Configurations and dimensions	22
Feeder and control equipment	23
Gas metering and air treatment	24
Nozzles caps and air jets	25
Front end construction detail	26
Valve construction and overhaul	27
Process control and job planning	28
PF 700 feeder technical reference	29
Balaji powder and controller reference	30
Reference lighting and test charts	31
Recommended service inventory	32
Handle and mounting assembly	33
Electrical control box reference	34
Auxiliary air jet assembly	35
Tool post fixture reference	36
Complete front end references	37
Siphon assembly contents	38
Assembly kits and technical reference conflicts	39
Detailed replacement parts	40
Detailed replacement parts	41
Detailed replacement parts	42
Detailed replacement parts	43
Detailed replacement parts	44

Expanded technical index

CONTENTS 25-42

Section	Page
Detailed replacement parts	45
Confirmed K/M operating parameters	46
Recipe selection and technical checks	47
Table 1 Standard US	48
Table 1 Standard US	49
Table 1 Standard US	50
Table 1 Standard US	51
Standard table notes	52
Standard table notes	53
Table 2 High rate US	54
Table 2 High rate US	55
High rate table notes	56
Table 3 Standard metric	57
Table 3 Standard metric	58
Table 3 Standard metric	59
Table 3 Standard metric	60
Table 4 High rate metric	61
Table 4 High rate metric	62

Gun operating principle

EXPANDED TECHNICAL REFERENCE | REVISION 3

Gas and powder paths

The gun is built around a siphon-jet front end. Oxygen and fuel enter separate passages through the valve and gun body, then reach the selected siphon plug/nozzle. Powder is delivered by a separate feeder in a carrier-gas stream. The controlled flame heats and accelerates the powder toward the prepared surface.

Three mechanical sections

The front end comprises the nozzle, nozzle nut, siphon plug, air cap and air-cap body. The body joins these to the valve and supports the handle or machine mount. The rear assembly is either a manual gas valve or an externally controlled gas block.

Why separate powder feed matters

An external feeder allows controlled powder delivery while the operator changes torch orientation. Actual output depends on powder characteristics, feed disc, carrier conditions and hose arrangement. A feeder setting must be calibrated rather than inferred from the gun angle.

Coating formation

Surface preparation, material compatibility, particle heating, stand-off and workpiece temperature act together. A stable visible flame alone does not prove a satisfactory coating. Use a representative coupon and application-specific acceptance criteria.

Configurations and dimensions

EXPANDED TECHNICAL REFERENCE | REVISION 3

Machine-mounted manual gun

The technical reference 6PM-II configuration combines a manual gas valve, tool-post mounting, electrical control box and remote switch. Its reference approximate mass is 1.4 kg and length about 26 cm. These are reference gun dimensions, not packed shipping dimensions or a guarantee for the supplied Balaji assembly.

Hand-held gun

The 6PM-II-H reference uses a control handle containing the powder-feed switch and control cable. The handle also has a mounting bracket/stud. Reference mass is approximately 1.9 kg. Confirm the actual assembly weight if required for handling or shipment.

Automatic gun

The 6PM-II-A technical reference replaces the gas valve with gas block 6PM-II-50. That block has no manual gas shutoff function; an external controller manages gases. Do not apply the manual lighting-detent procedure to it.

Current supplied configuration

Use the actual order specification and identification plate. This edition confirms only the oxygen-acetylene, 220 V single-phase arrangement with K/M nozzle use. Automatic controls are described for identification, not assumed to be installed.

Feeder and control equipment

EXPANDED TECHNICAL REFERENCE | REVISION 3

Electrical control

The technical reference control box connects the powder-feed motor, handle or remote switch and optional vibrator-air control. In the supplied Balaji system the confirmed input is 220 V single phase. The older 115 V statement is not an alternative supply option. Verify frequency, current rating, protective earth and each component nameplate.

Air control assembly

The reference 6PM-II-890 assembly combines solenoid, regulator, gauge, adapter cable and mounting hardware. Its role is to switch vibrator air with powder feed. Its presence does not guarantee flame or gas safety interlocks.

Powder feeder

The Balaji brochure describes a PF-700 nominal 700 cm³ canister and a 3350 cm³ option. The technical reference tables use a 3MP feeder and wheel letters S/H/L/P. These wheel/RPM references are not directly equivalent to the installed feeder.

Dual-feed arrangements

The technical reference discusses separate hoppers for bond coat and top coat. Such operation requires a feeder specifically designed and interlocked for it. Never open or refill a pressurized hopper based only on that description; follow the exact feeder manual.

Information required for internal repair

Obtain the installed feeder's electrical diagram, disc specification, pressure rating, seal specification and service procedure. Those details cannot be inferred from the gun manual.

Gas metering and air treatment

EXPANDED TECHNICAL REFERENCE | REVISION 3

Two-tube gas flowmeter

The reference 2GFM measures oxygen and fuel on separate scales. Its readings are used to balance gases in conjunction with pressure, nozzle and restrictions. Scale values such as 45 or 55 are not physical flow units without the instrument calibration.

Gas regulators

Use regulators rated for the identified gas and continuous required demand. A regulator that cannot sustain flow can cause pressure droop and unstable balance. Confirm withdrawal limits with the gas supplier, including the manifold arrangement.

Nitrogen carrier regulator

The technical reference lists a nitrogen regulator capable of high output, but its maximum rating is not a feeder operating setpoint. Select the actual working pressure from the qualified feeder/powder procedure and never exceed the weakest rated component.

Air control

The technical reference air unit uses filtration before and after regulation, with a gauge and shutoff. Keep the supply clean and dry, drain filters safely and inspect for contamination. Gun air, vibrator air, auxiliary jets and workpiece cooling are different duties.

Hoses

Reference regulator-to-meter hose options are approximately 1.2 m and 4.6 m; the Balaji brochure lists a 5 m system hose set. Length, bore and fittings affect pressure loss. Confirm the supplied set rather than mixing the references.

Nozzles caps and air jets

EXPANDED TECHNICAL REFERENCE | REVISION 3

Nozzle choice

M and K are used in the confirmed setup. The technical reference also lists D, MH and N configurations. Do not infer compatible fuel, powder or feed rate merely from a similar appearance. Match nozzle, siphon plug and cap before commissioning.

Standard and reversible caps

The standard cap cools the gun and is not reversible. The pinch/cool cap uses P outward for pinching or C outward for cooling. The effect on pattern, heating and deposition must be qualified for the powder.

External air jets

The optional 6PM-II-330 assembly mounts an air block above the gun and a jet head around the front. The technical reference distinguishes cylindrical-work nozzles 6PM-II-335 and flat-work nozzles 6PM-II-30. Jet intersection distance and air pressure are row-specific.

Separate settings

Never use a powder-vibrator pressure as gun-cooling pressure. Table notes include air-jet pressures substantially different from the 15 psi standard gun-cooling reference. Label regulators and hoses by function.

Evaluation

Confirm the spray footprint on a coupon, deposition pattern, overheating tendency and coating quality after any cap, jet or nozzle change.

Front end construction detail

EXPANDED TECHNICAL REFERENCE | REVISION 3

Siphon plug and gas tubes

The technical reference four-jet siphon plug 6PM-II-605 engages two short gas tubes and a locating dowel. O-rings 6PM-II-24 seal the gas connections. The rear O-ring 6PM-II-79 seals the carrier-gas path.

Baffle and sleeve

Baffle 6PM-II-518 is retained by ring 6PM-II-84 in the correct groove. Sleeve 6PM-II-82 provides a seating surface for the 6PM-II-81 seals. Verify complete seating and seal condition after overheating or backfire.

Removal and cleaning

Isolate, depressurize and cool. Work on a clean bench. Remove the front-end components in their identified order, keeping parts grouped by configuration. Use correctly sized cleaning wires straight in and out; no drilling or twisting to enlarge jets.

Assembly

Apply only approved compatible service lubricant in the specified minimum quantity. Keep excess out of jets. Align gas passages and the dowel; seat the siphon flange flush on a clean face. Hand-tighten the nozzle nut and air-cap body; do not use tools to overtighten.

Release

Inspect seals, retainers and thread condition, then complete the approved leak and functional checks. Missing torque, seal material or jet dimensions must be obtained from Balaji for the actual revision.

Valve construction and overhaul

EXPANDED TECHNICAL REFERENCE | REVISION 3

Sealing arrangement

The manual valve uses a cylindrical core, spring-loaded plungers, seal rings, a detent and a rear hose connection block. It controls oxygen and fuel while cooling air has a separate path. Faulty seals can cause leakage or incorrect lighting flow.

Disassembly order

Qualified service personnel must isolate all supplies first. Clean the exterior; remove the handle and rear connection block before internal disassembly. Capture the detent pin/spring. Withdraw keyed plungers without twisting and keep the oxygen/fuel components identified.

Inspection

Check core passages, bleeder ports, seal grooves, springs and mating surfaces. Do not lap or machine sealing parts without an approved procedure. The old technical reference contains conflicting plunger references and an invalid '13 inch (0.3 mm)' wire statement; no cleaning-wire diameter is authorized from that text.

Reassembly

Use approved seals and oxygen-compatible materials. Align each plunger key slot with its pin. A plunger that will not seat fully must not be forced. Match F and O markings between the block and body; the rear block must fit freely.

Functional release

The technical reference flow charts on the following pages are diagnostic references, not a substitute for a gas-safe test method. Approved leak, cross-leak and control checks by a competent technician are required before lighting.

Process control and job planning

EXPANDED TECHNICAL REFERENCE | REVISION 3

Surface and material

Define substrate material, condition, preparation method and finish. Identify the powder by supplier, exact grade, batch and particle-size range. Decide whether a bond coat or subsequent fusing is needed using a qualified procedure.

Thermal and motion control

Specify stand-off, spray angle, traverse/rotation, overlap, preheat and maximum temperature. Use a measurement method suited to the surface. Do not assume a generic infrared reading is accurate without accounting for emissivity and the process.

Feed calibration

Measure collected powder mass over a timed interval using the approved cold calibration procedure. kg/h = grams × 3.6 / seconds. Record wheel/disc, RPM, carrier setting and hose arrangement. Repeat after material or hardware changes.

Consumption planning

For a validated rate, required powder equals feed rate × spraying time, adjusted for stops and usable material. Deposited mass is not the same as powder fed. Gas planning must use verified volumetric consumption, not meter scale numbers.

Quality release

Define coupon acceptance criteria before spraying: thickness, adhesion and any required hardness, porosity, finish or abradability. Record failures and corrective settings. High-rate operation requires separate qualification; it is not simply a higher RPM.

PF 700 feeder technical reference

EXPANDED TECHNICAL REFERENCE | REVISION 3

Published mechanical data

The supplied Balaji brochure lists nominal canister capacity 700 cm³, a 3350 cm³ optional feeder, disc-speed range 1-28 rpm, digital RPM display and local/remote feed selection. The brochure gives 600 × 350 × 750 mm excluding stand and 55 kg net excluding stand. Confirm these mechanical figures against the delivered unit.

Operating principle

Powder gravity-feeds into the slots of a rotating disc and is conveyed into the feed hose by the carrier gas. Constant volumetric feeding does not mean constant mass flow for different powder densities. The disc control changes feed rate, but powder calibration remains necessary.

Electrical data

The actual system supply confirmed by Balaji is 220 V single phase. The brochure prints 230 V / single phase / 3 A; the old control manual prints 115 V. Do not treat the brochure current as the confirmed input current or fuse rating for every delivered unit. The nameplate and approved circuit design govern.

Safety and maintenance

The brochure describes a pressure relief valve. Its setpoint, inspection interval, canister design pressure and seal material are not provided here. Never alter or bypass it. Isolate, depressurize and verify zero pressure before opening the hopper. Obtain feeder-specific service instructions for internal work.

Balaji powder and controller reference

EXPANDED TECHNICAL REFERENCE | REVISION 3

Published powder grades

The Balaji brochure lists BU-1011 alumina-titania 97/3, BU-1070 alumina-titania 60/40, BU-1025 chromium oxide, BU-1037 nickel-aluminium 95/5, BU-1087 nickel-aluminium-molybdenum 90/5/5 and BU-1260 nickel-based self-fluxing alloy. Confirm each grade's current technical data sheet and particle size before use.

Do not equate numeric codes

BU-1011 is not automatically the same as reference table code 101. BU-1037 is not automatically equivalent to 450 or another bond-coat code. No row in the original spray table is assigned to a Balaji powder without a validated cross-reference.

Applications

Published examples include wear protection on shafts, sleeves, seal areas, rollers, textile guides and wear rings. Material suitability, bond preparation, thickness and finishing must be selected for the actual service environment.

Optional AP 2751 controller

The brochure describes remote start/stop and feed control, pressure/flame monitoring, PLC sequencing and status indication. These features apply only to an appropriately equipped and commissioned panel. Obtain its wiring, interlock list and operating instructions; do not infer installation from the brochure.

Performance limits

The brochure's maximum-rate claims are application dependent. Actual capability must be demonstrated with the selected powder, feeder, gas capacity, nozzle and cooling arrangement. The high-rate reference tables do not establish a universal guarantee.

Reference lighting and test charts

EXPANDED TECHNICAL REFERENCE | REVISION 3

Restricted service reference

The following values are copied from the technical reference's valve-diagnostic section. They are instrument-scale readings for the reference setup, not L/min and not normal production gas flows. Only a qualified technician using a documented safe test method may assess them.

Lighting-position chart

Acetylene configuration: oxygen pressure 30 psi, fuel pressure 14.50 psi (1.00 bar); oxygen scale 3-6 and fuel scale 16-20. Hydrogen technical reference reference: 41/31 psi and scales 3-6/19-23. Hydrogen is outside the confirmed Balaji configuration.

Circuit check chart

M nozzle reference: oxygen 40 psi / scale 52; acetylene 1.00 bar (14.50 psi) / scale 75. D nozzle reference: oxygen 35 psi / scale 49; acetylene 1.00 bar (14.50 psi) / scale 74. These are unlit circuit-check references, not ignition settings. The technical reference tolerance is ±5 scale points for its meter only.

Interpretation

Unexpected low flow can indicate restriction; high flow can indicate leakage or a different nozzle/meter condition. Neither proves a diagnosis. Check leaks, hoses, regulator delivery and calibrated instrumentation before replacing parts.

Test safety

Do not release fuel gas into an unventilated area or improvise a purge/test. technical reference steps require an unlit gas-flow check, so the commissioning authority must approve ventilation, gas volumes, sequencing and isolation. Never exceed the acetylene limit.

Recommended service inventory

EXPANDED TECHNICAL REFERENCE | REVISION 3

Reference stock quantities

The technical reference recommends: one pinch/cool cap, one gun-cooling cap, six selected nozzles, two compatible siphon-plug assemblies, one gas-valve seal kit, one siphon-plug seal/baffle kit and one suitable control-box fuse pack. Choose nozzle suffixes for the approved jobs.

Lubricants and consumables

The technical reference lists separate proprietary front-end and valve lubricants. No Balaji replacement is assumed merely by changing the brand name. Obtain the approved lubricant specification and compatibility confirmation before service.

Electrical spares

A fuse must match the actual 220 V control system's voltage rating, current rating, breaking capacity and time characteristic. Do not copy a fuse solely from an older 115 V control-box list.

Storage

Keep spare seals sealed, identified and clean, away from heat, oil contamination and direct sunlight. Inspect shelf-life and material compatibility. Keep nozzle/plug sets labelled so components from different configurations are not mixed.

Ordering

Send model, serial number, photograph, part marking and required quantity. The original reference numbering is retained to aid identification; it does not establish universal interchangeability.

Handle and mounting assembly

EXPANDED TECHNICAL REFERENCE | REVISION 3

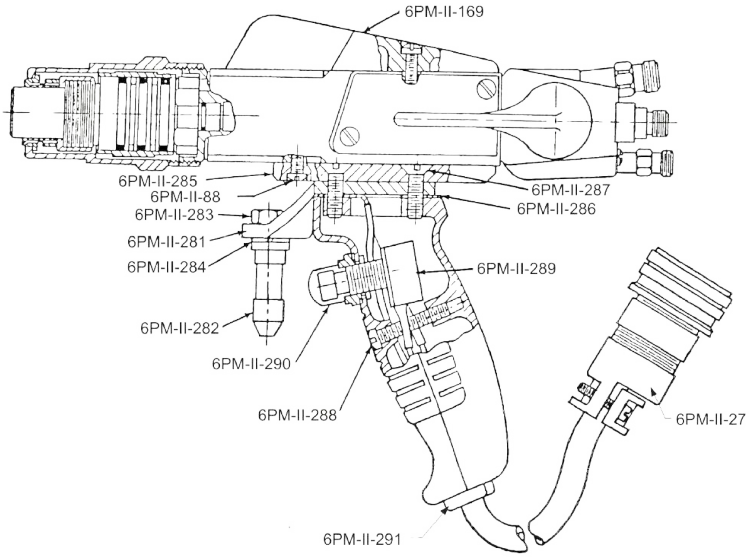

Identification

The control handle provides a powder-feed switch and cable connection. Mechanical attachment does not establish electrical compatibility. Isolate power before servicing the switch, cable or strain relief.

Service checks

Check fasteners, mounting gasket, switch boot, cable insulation and strain relief. Use the actual wiring diagram and an appropriately qualified technician for electrical faults.

Electrical control box reference

EXPANDED TECHNICAL REFERENCE | REVISION 3

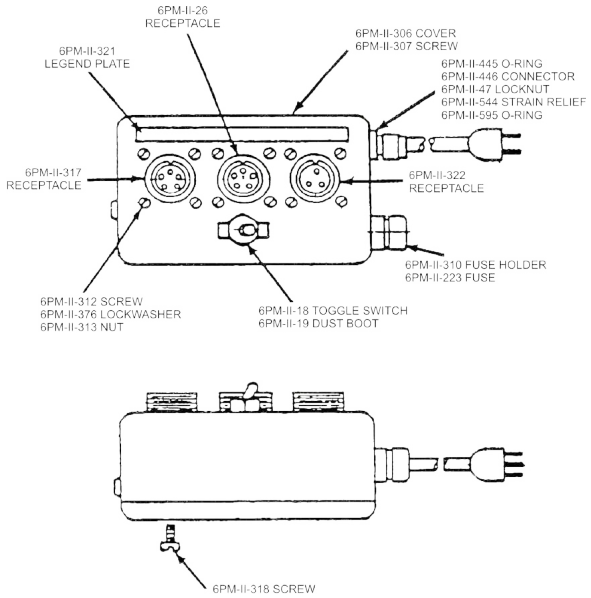

220 V configuration

This drawing identifies parts in the supplied technical reference catalogue. It is not a 220 V wiring diagram. Verify the actual box model and ratings; do not connect an older 115 V unit to 220 V.

Service boundary

Switch, fuse, receptacle and control-cable replacement require the correct electrical specifications. The technical reference uses both 975 and 675 control-box references; resolve the physical assembly before ordering.

Auxiliary air jet assembly

EXPANDED TECHNICAL REFERENCE | REVISION 3

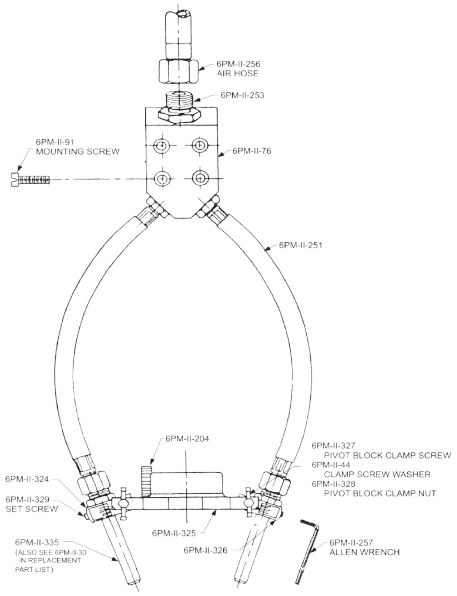

Arrangement

Set the jet direction and intersection only from a qualified row-specific procedure. Flat and cylindrical work use different technical reference nozzle references.

Inspection

Isolate air before adjustment or repair. Check the pivot blocks, clamp screws, jet hoses and connectors; ensure adjustment cannot shift during spraying.

Tool post fixture reference

EXPANDED TECHNICAL REFERENCE | REVISION 3

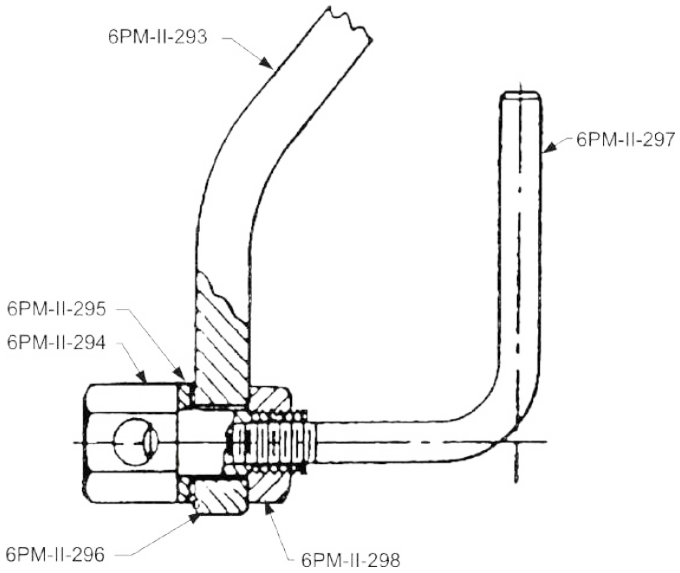

Machine mounting

Secure the fixture to equipment with suitable stiffness and travel. Support hoses independently so they do not pull the gun out of alignment. Keep hot spray away from cables and slides.

Release check

Verify clamp engagement, clearances throughout motion, reachable isolation controls and stable stand-off before a trial. The drawing does not supply load ratings or machining dimensions.

Complete front end references

TECHNICAL SECTION 10 | NOZZLES AND SMALL PARTS

Reference	Description
6PM-II-3 / 4	Pinch/cool cap / standard gun-cooling cap
6PM-II-7C-1	No. 1 nozzle (MPS reference; outside confirmed fuel configuration)
6PM-II-7C-B / D / E / F	B, D, E and F nozzles; exact configuration must be confirmed
6PM-II-7C-H / L	H / L nozzle assemblies; technical reference includes seals 217 and 218
6PM-II-7C-K / M / MH	K / M / MH nozzles; MH hydrogen reference is outside this setup
6PM-II-7C-N / P	N concentrating nozzle / P propane nozzle assembly (outside current setup)
6PM-II-24 / 29	Gas-tube O-ring pack / nameplate mounting screw
6PM-II-36 / 40	Air cap / gun body assembly
6PM-II-67 / 72	Top-plate mounting screw / gas connecting tube
6PM-II-79 / 80 / 81	Siphon rear seal / location-dependent seal / sleeve seals; confirm material and revision
6PM-II-82 / 84	Sleeve / baffle retaining ring (technical reference also calls it a screw)
6PM-II-88 / 117 / 122	Mounting-plate screw / air-cap body / tool-post mount
6PM-II-169 / 217 / 218	Top plate / nozzle assembly seals
6PM-II-518 / 525	Baffle / nozzle nut

Additional fuels and nozzle types are included for identification only. No LPG, CNG, MPS or hydrogen conversion is approved by this edition. Verify current Balaji availability and exact seal specifications.

Siphon assembly contents

PREFIX 6PM-II APPLIES TO REFERENCES BELOW

Assembly suffix	technical reference component inclusions
600 / 605	Two-jet / four-jet siphon plug; technical reference includes 79, 81, 82, 84 and 518.
625	Four-jet combination with H nozzle; technical reference includes 7C-H, 36, 79, 81, 82, 84, 518 and 525.
644	Two-jet B combination; technical reference lists 7C-B, 79, 81, 82, 84, 581, 525 and 600.
645	Two-jet M combination; technical reference lists 7C-M, 79, 81, 82, 84, 581, 525 and 600.
655	Four-jet M combination; technical reference lists 7C-M, 79, 81, 82, 84, 581, 525 and 605.
675	Four-jet D combination; technical reference lists 7C-D, 79, 81, 82, 84, 518, 525 and 605.
690	Four-jet K combination; technical reference lists 7C-K, 79, 81, 82, 84, 518, 525 and 605.
800	Two-jet siphon assembly; technical reference lists 79, 81, 82, 84 and 518.
825 / 830	Two-jet P / L combinations; technical reference lists the corresponding nozzle, 36, 79, 81, 82, 84, 518 and 525.
855	Siphon plug spare kit; technical reference lists 79, 81, 84 and 518.

The technical reference prints 581 in several assembly lists but identifies the baffle as 518 elsewhere. That discrepancy has not been silently corrected. Obtain the current bill of materials before ordering or assembling.

Assembly kits and technical reference conflicts

EXPANDED TECHNICAL REFERENCE | REVISION 3

Gas valve kit

6PM-II-280 technical reference inclusions are 80, 137, 191 and 195. The 6PM-II-5 valve assembly note excludes mounting screws/washers, powder-hose connection and spare kit. Verify the supplied package rather than assuming each service item is included.

Handle assembly

6PM-II-510 technical reference handle assembly includes the handle-related list except top plate 169 and mounting-plate screw 88. Cable plug, switch, boot, strain relief, mounting gasket and handle fasteners require revision matching.

Mounting fixtures

6PM-II-125 lists 293, 294, 295, 296, 297 and 298. 6PM-II-299 lists 85, 87 and 243; the technical reference listing does not clearly include every clamp screw. Confirm a complete fixture package.

Remote cable and safety package

6PM-II-590 lists 18, 19 and 27, but the description for 19 differs in the control-box and cable lists. The technical reference safety package 397 lists eye protection 393 and hearing protection 394. These catalogue entries do not establish compliance with the current workplace assessment.

Unresolved references

The technical reference alternates 975 and 675 for the control box and contains inconsistent part descriptions. Treat catalogue numbers as identification aids. Balaji must confirm the actual revision, replacement specification and full assembly contents.

Detailed replacement parts

TECHNICAL SECTION 10 | ENTRIES 1-22

Reference	technical reference description / identification
6PM-II-5	Gas Valve Assembly
6PM-II-68	Valve Handle Mounting Screw (Pkg. of 5)
6PM-II-77	Mounting Screw (Pkg. 5)
6PM-II-78	Lockwasher (Pkg. 5)
6PM-II-80	Plunger O-Ring (Pkg. of 2)
6PM-II-92	Valve Block
6PM-II-98	Air Hose Connection
6PM-II-137	Connection Block O Ring (Pkg of 3)
6PM-II-187	Valve Core Assembly
6PM-II-188	Detent Pin
6PM-II-189	Valve Handle Assembly
6PM-II-191	Plunger Sea O-Ring (Pkg. of 2)
6PM-II-192	Plunger
6PM-II-194	Plunger Spring
6PM-II-195	Valve Core O-Ring (Pkg. of 6)
6PM-II-196	Detent Pin Spring
6PM-II-197	Hose Connection Block Assembly
6PM-II-199	Connection Block Mounting Screw
6PM-II-280	Gas Valve O-Ring Package (Includes 6PM-II-80, 6PM-II-137,
6PM-II-27	Cable Plug
6PM-II-88	Mounting Plate Screw (Pkg. of 10)
6PM-II-169	Top Plate (Supplied on all type 6PM-II--II Guns)

Reference descriptions may contain technical reference typographical errors or incomplete assembly inclusions. Confirm current Balaji part number, revision, seal material and full bill of materials before ordering. Duplicate references are retained where the technical reference uses them in different assemblies.

Detailed replacement parts

TECHNICAL SECTION 10 | ENTRIES 23-44

Reference	technical reference description / identification
6PM-II-281	Tool Post Bracket
6PM-II-282	Mounting Stud
6PM-II-283	Nut (Pkg. of 5)
6PM-II-284	Lockwasher (Pkg. 5)
6PM-II-285	Handle Mounting Plate
6PM-II-286	Handle Assembly Mounting Gasket
6PM-II-287	Handle Assembly Mounting Screw
6PM-II-288	Handle Assembly Screw
6PM-II-289	Switch
6PM-II-290	Switch Boot
6PM-II-291	Strain Relief
6PM-II-510	Control Handle Assembly (includes all of the above parts
6PM-II-18	Toggle Switch
6PM-II-19	Dust Boot
6PM-II-26	Control Switch Receptacle - 5Terminal - Female
6PM-II-223	Fuse
6PM-II-306	Cover
6PM-II-307	Cover Mounting Screw (Pkg. of 6)
6PM-II-310	Fuse Holder
6PM-II-312	Receptacle Mounting Screw (Pkg. of 6)
6PM-II-313	Receptacle Nut (Pkg. of 6)
6PM-II-317	Powder Feed Receptacle - 5 Terminal - Female

Reference descriptions may contain technical reference typographical errors or incomplete assembly inclusions. Confirm current Balaji part number, revision, seal material and full bill of materials before ordering. Duplicate references are retained where the technical reference uses them in different assemblies.

Detailed replacement parts

TECHNICAL SECTION 10 | ENTRIES 45-66

Reference	technical reference description / identification
6PM-II-318	Control Box Mounting Screw (Pkg. of 6)
6PM-II-321	Legend Plate
6PM-II-322	Air Vibrator Receptacle - 3 Terminal - Female
6PM-II-376	Receptacle Lockwasher (Pkg. of 6)
6PM-II-445	Strain Relief O-Ring (Pkg. of 6)
6PM-II-446	Connector
6PM-II-447	Connector Nut
6PM-II-544	Strain Relief
6PM-II-595	O -Ring (Pkg. of 4)
6PM-II-30	Air Nozzle (for Flat Surfaces)
6PM-II-44	Pivot Block Clamp Screw Washer (Pkg. of 4)
6PM-II-76	Air Block
6PM-II-91	Air Block Mounting Screw (Pkg. of 4)
6PM-II-204	Air Jet Head Clamp Screw
6PM-II-251	Air Nozzle Hose
6PM-II-253	Air Block Hose Connector
6PM-II-256	Supply Air Hose
6PM-II-257	Allen Wrench
6PM-II-324	Pivot Block (Right)
6PM-II-325	Air Jet Head
6PM-II-326	Pivot Block (Left)
6PM-II-327	Pivot Block Clamp Screw

Reference descriptions may contain technical reference typographical errors or incomplete assembly inclusions. Confirm current Balaji part number, revision, seal material and full bill of materials before ordering. Duplicate references are retained where the technical reference uses them in different assemblies.

Detailed replacement parts

TECHNICAL SECTION 10 | ENTRIES 67-88

Reference	technical reference description / identification
6PM-II-328	Pivot Block Clamp Nut
6PM-II-329	Air Nozzle Set Screw (Pkg. of 4)
6PM-II-330	Air Jet Assembly (See Note)
6PM-II-335	Air Nozzle (for cylindrical surfaces)
6PM-II-330	Air Jet Assembly available
6PM-II-330	AIR JET ASSEMBLY AVAILABLE AS OPTIONAL EQUIPMENT
6PM-II-85	Tool Post Bracket
6PM-II-86	Clamp Screw
6PM-II-87	Washer
6PM-II-125	Tool Post Fixture Assembly (includes 6PM-II-293, 6PM-II-294, 6PM-II-295, 6PM-II-296, 6PM-II-297 and 6PM-II-298)
6PM-II-243	Tool Post Bar
6PM-II-293	Tool Post Fixture Body
6PM-II-294	Tool Post Cross Bar
6PM-II-295	Cross Bar Lockwasher (Pkg. of 5)
6PM-II-296	Cross Bar Washer (Pkg. of 5)
6PM-II-297	Clamp Screw
6PM-II-298	Clamp Screw Nut
6PM-II-299	Tool Post Fixture Assembly (Includes
6PM-II-13	Individual Hose Clamp
6PM-II-18	Switch
6PM-II-19	Screw
6PM-II-27	Cable Plug

Reference descriptions may contain technical reference typographical errors or incomplete assembly inclusions. Confirm current Balaji part number, revision, seal material and full bill of materials before ordering. Duplicate references are retained where the technical reference uses them in different assemblies.

Detailed replacement parts

TECHNICAL SECTION 10 | ENTRIES 89-110

Reference	technical reference description / identification
6PM-II-50	Gas Block Assembly (“5C” System)
6PM-II-52	Twin Hose Retaining Ferrule
6PM-II-89	Twin Oxygen & Acetylene Hose Assembly
6PM-II-90	Air Hose Assembly
6PM-II-98	Air Hose Connection
6PM-II-99	Air House Connection Cap
6PM-II-101	Powder Feed Hose
6PM-II-111	Truare Phers
6PM-II-112	Adjustable Open-End Wrench
6PM-II-118	Screwdriver
6PM-II-126	Spark Lighter
6PM-II-127	Cleaning Brush
6PM-II-128	Cleaning Wire Kit
6PM-II-193	Proprietary front-end lubricant; specification required
6PM-II-198	Proprietary valve lubricant; specification required
6PM-II-301	Oxygen House Fitting
6PM-II-302	Acetylene House Fitting
6PM-II-352	Gun Case
6PM-II-393	Eye Protectors
6PM-II-394	Hearing Protectors
6PM-II-395	Replacements Lens
6PM-II-396	Replacement Cover Plate

Reference descriptions may contain technical reference typographical errors or incomplete assembly inclusions. Confirm current Balaji part number, revision, seal material and full bill of materials before ordering. Duplicate references are retained where the technical reference uses them in different assemblies.

Detailed replacement parts

TECHNICAL SECTION 10 | ENTRIES 111-115

Reference	technical reference description / identification
6PM-II-397	Safety Package (Consists of 6PM-II-393, 6PM-II-394)
6PM-II-400	Quick Disconnect Hose Package
6PM-II-590	Remote Control Cable (Includes 6PM-II-18, 19 27)
6PM-II-666	Flame Spray Handbook, Vol. 11
6PM-II-999	Instruction Manual

Reference descriptions may contain technical reference typographical errors or incomplete assembly inclusions. Confirm current Balaji part number, revision, seal material and full bill of materials before ordering. Duplicate references are retained where the technical reference uses them in different assemblies.

Confirmed K/M operating parameters

EXPANDED TECHNICAL REFERENCE | REVISION 3

System

Balaji Udhyog 6P-II: oxygen + acetylene, K or M nozzle, 220 V single-phase supply.

Nitrogen carrier

55 psi = 3.79 bar. Verify feeder rating, regulator and calibrated gauge before use.

Acetylene

1.00 bar = 14.50 psi. Do not increase above the approved setpoint. Maximum acetylene safety limits still apply.

Spray distance

200-250 mm (7.87-9.84 in) for the confirmed K/M arrangement.

High-rate values

Rows specified at 35 lb/h use 15.88 kg/h. Rows specified at 82 ft3/h oxygen use 2.32 m3/h. These are row-specific values, not a universal rate for every powder.

Production checks

Confirm powder identity, nozzle assembly, carrier flow, feeder calibration and coating results. Instrument scale numbers are not L/min. TBC entries are withheld pending technical confirmation.

Recipe selection and technical checks

EXPANDED TECHNICAL REFERENCE | REVISION 3

Unconfirmed values

TBC means confirmation is required; do not set the machine from a TBC value.

Powder-specific recipes

Powder identifiers, feed wheel, RPM and gas flows must match the installed feeder and selected powder. No automatic equivalence between powder brands is implied.

Other configurations

Hydrogen/MH, D and N arrangements are outside the confirmed oxygen-acetylene K/M setup. Obtain a separate approved procedure.

Release

A complete job sheet and acceptable test coupon are required before production. Contact sales@balajiudyog.in with the powder code and nozzle details.

Table 1 Standard US

PANEL A | ROWS 1-28

K/M operating values updated. Select the correct powder and nozzle; validate the complete job recipe before production. TBC = technical confirmation required.

No.	Powder / notes	Nozzle	O2 press.	Fuel press.	H2 press.	O2 scale	Fuel scale	H2 scale	N2 press.	N2 scale
1	12C	P7C -M	32	14.50	-	45	55	-	55	37
2	14E	P7C -M	32	14.50	-	45	55	-	55	37
3	15E	P7C -M	32	14.50	-	45	55	-	55	37
4	15E	P7C -MH	30	-	23	40	-	50	55	40
5	16C	P7C -M	32	14.50	-	45	55	-	55	37
6	TBC code	P7C -M	32	14.50	-	45	55	-	55	37
7	19E	P7C -M	32	14.50	-	45	55	-	55	37
8	31C-NS	P7C -M	32	14.50	-	45	55	-	55	37
9	36C	P7C -M	32	14.50	-	45	55	-	55	37
10	41C	P7C -M	32	14.50	-	45	55	-	55	37
11	41F-NS	P7C -MH	25	-	23	35	-	60	55	37
12	42C	P7C -M	32	14.50	-	45	55	-	55	37
13	43C	P7C -M	32	14.50	-	45	55	-	55	37
14	43F-NS	P7C -MH	28	-	28	35	-	70	55	37
15	44	P7C -M	32	14.50	-	45	55	-	55	37
16	45C-NS	P7C -M	27	14.50	-	40	60	-	55	37
17	51	P7C -M	32	14.50	-	45	55	-	55	37
18	52C- NS(5)	P7C -MH	40	-	30	43	-	65	55	37
19	54 (4)	P7C -MH	20	-	20	30	-	60	55	40
20	55	P7C -MH	37	-	35	40	-	75	55	40
21	56C-NS	P7C -M	32	14.50	-	45	55	-	55	37
22	75F(4)(13)	P7C -D	30	15	-	35	45	-	55	37
23	91	P7C -M	32	14.50	-	45	55	-	55	37
24	101 (15)(16)	P7C -K	30	14.50	-	42	50	-	55	37
25	101FP (16)(18)	P7C -K	30	14.50	-	42	50	-	55	37
26	101SF (14)(18)	P7C -D	30	15	-	42	50	-	55	37
27	102 (16)(18)	P7C -K	30	14.50	-	42	50	-	55	37
28	105 (16)(18)	P7C -K	30	14.50	-	42	50	-	55	37

US units: pressure psi; distance inches; powder lb/h; gas consumption ft³/h. Flow columns are instrument scales, not volumetric flow. D.E. = deposition efficiency. Numbers in parentheses refer to the accompanying numbered notes.

Table 1 Standard US

PANEL B | ROWS 1-28

K/M operating values updated. Select the correct powder and nozzle; validate the complete job recipe before production. TBC = technical confirmation required.

No.	Powder / notes	Wheel	RPM	Distance	D.E. %	Powder rate	O2 cons.	Fuel cons.	H2 cons.
1	12C	S	30	7.87-9.84	95	20	95	59	-
2	14E	S	35	7.87-9.84	95	20	95	59	
3	15E	S	35	7.87-9.84	95	20	95	59	
4	15E	S	37	7	95	20	76	-	249
5	16C	S	35	7.87-9.84	95	20	95	59	
6	TBC code	S	33	7.87-9.84	95	20	96	59	
7	19E	S	25	7.87-9.84	95	18	95	59	
8	31C-NS	S	32	7.87-9.84	90	16	95	59	
9	36C	S	30	7.87-9.84	85	TBC	TBC	59	
10	41C	S	38	7.87-9.84	95	12	96	-	245
11	41F-NS	S	39	6	90	10	60	59	
12	42C	S	25	7.87-9.84	95	10	95	59	
13	43C	S	22	7.87-9.84	90	10	95		310
14	43F-NS	S	27	7	90	12	62	59	
15	44	S	34	7.87-9.84	85	14	95	85	
16	45C-NS	S	15	7.87-9.84	90	10	75	59	
17	51	S	28	7.87-9.84	95	14	95	-	300
18	52C- NS(5)	S	25	7	85	5	95	-	242
19	54 (4)	S	29	7	80	4	74	-	375
20	55	S	20	4½	95	12	80	59	-
21	56C-NS	S	20	7.87-9.84	90	10	95	47	-
22	75F(4)(13)	S	15	3	80	9-10	61	59	-
23	91	S	30	7.87-9.84	95	10	95	49	-
24	101 (15)(16)	S	15	7.87-9.84	40	2	82	49	-
25	101FP (16)(18)	S	15	7.87-9.84	40	2	82	49	-
26	101SF (14)(18)	H	15	3	50	1.5	82	49	-
27	102 (16)(18)	S	15	7.87-9.84	55	2	82	49	-
28	105 (16)(18)	S	15	7.87-9.84	30	3	82	49	-

US units: pressure psi; distance inches; powder lb/h; gas consumption ft³/h. Flow columns are instrument scales, not volumetric flow. D.E. = deposition efficiency. Numbers in parentheses refer to the accompanying numbered notes.

Table 1 Standard US

PANEL A | ROWS 29-56

K/M operating values updated. Select the correct powder and nozzle; validate the complete job recipe before production. TBC = technical confirmation required.

No.	Powder / notes	Nozzle	O2 press.	Fuel press.	H2 press.	O2 scale	Fuel scale	H2 scale	N2 press.	N2 scale
29	105SFP(14)(18)	P7C -D	25	15	-	42	50	-	55	37
30	106 (16)(18)	P7C -K	30	14.50	-	42	50	-	55	30
31	106F(16)(18)	P7C -K	30	14.50	-	42	50	-	55	30
32	110 (16)(18)	P7C -K	30	14.50	-	42	50	-	55	37
33	111 (16)(18)	P7C -K	30	14.50	-	42	50	-	55	37
34	130 (16)(18)	P7C -K	30	14.50	-	42	50	-	55	37
35	130SF (14)(18)	P7C -K	30	14.50	-	42	50	-	55	37
36	131 VF (14)(18)	P7C -D	25	15	-	42	50	-	55	37
37	136 F (16)(18)	P7C -D	30	15	-	42	50	-	55	37
38	201 (16)(18)	P7C -D	30	15	-	42	50	-	55	37
39	210 (16)	P7C -K	30	14.50	-	42	50	-	55	37
40	211 (16)	P7C -K	30	14.50	-	42	50	-	55	37
41	212 F- NS	P7C -D	25	15	-	42	50	-	55	40
42	350	P7C -M	32	14.50	-	45	55	-	55	37
43	351	P7C -M	32	14.50	-	45	55	-	55	37
44	438 NS-1(2)(3)	P7C -D	25	15	-	40	55	-	55	40
45	439 NS-1(2)(3)	P7C -D	25	15	-	40	55	-	55	40
46	442 (6)(7)	P7C -D	25	15	-	42	50	-	55	37
47	443	P7C -M	32	14.50	-	45	55	-	55	37
48	444 (7)	P7C -D	25	15	-	42	50	-	55	37
49	445 (8)	P7C -M	32	14.50	-	45	55	-	55	37
50	447 (7)	P7C -M	32	14.50	-	45	55	-	55	37
51	448 (7)	P7C -D	25	15	-	42	50	-	55	37
52	449 (7)	P7C -D	25	15	-	42	50	-	55	37
53	450	P7C -M	32	14.50	-	45	55	-	55	37
54	451	P7C -M	32	14.50	-	45	55	-	55	37
55	501(2)	P7C -M	32	14.50	-	45	55	-	55	37
56	625	P7C-D	40	-	25	18	-	73	55	37

US units: pressure psi; distance inches; powder lb/h; gas consumption ft³/h. Flow columns are instrument scales, not volumetric flow. D.E. = deposition efficiency. Numbers in parentheses refer to the accompanying numbered notes.

Table 1 Standard US

PANEL B | ROWS 29-56

K/M operating values updated. Select the correct powder and nozzle; validate the complete job recipe before production. TBC = technical confirmation required.

No.	Powder / notes	Wheel	RPM	Distance	D.E. %	Powder rate	O2 cons.	Fuel cons.	H2 cons.
29	105SFP(14)(18)	H	10	3	70	2½	82	49	-
30	106 (16)(18)	S	15	7.87-9.84	20	2	82	49	-
31	106F(16)(18)	L	45	7.87-9.84	25	2	82	49	-
32	110 (16)(18)	S	15	7.87-9.84	35	2	82	49	-
33	111 (16)(18)	S	15	7.87-9.84	25	2	82	49	-
34	130 (16)(18)	S	15	7.87-9.84	35	2	82	49	-
35	130SF (14)(18)	S	15	7.87-9.84	40	2	82	49	-
36	131 VF (14)(18)	H	15	3	70	2	82	49	-
37	136 F (16)(18)	S	15	2½	45	2	82	49	-
38	201 (16)(18)	L	35	3	20	2	82	49	-
39	210 (16)	S	15	7.87-9.84	65	2	82	49	-
40	211 (16)	S	15	7.87-9.84	90	2	82	49	-
41	212 F- NS	S	24	6	50	4	82	49	-
42	350	S	15	7.87-9.84	90	TBC	95	59	-
43	351	S	16	7.87-9.84	90	TBC	95	59	-
44	438 NS-1(2)(3)	S	23	3½	75	7	74	57	-
45	439 NS-1(2)(3)	S	15	3½	85	6	74	57	-
46	442 (6)(7)	S	12	10	85	5	82	49	-
47	443	S	12	7.87-9.84	80	6	95	59	-
48	444 (7)	S	12	9	85	5	82	49	-
49	445 (8)	S	12	7.87-9.84	90	5	95	59	-
50	447 (7)	S	10	7.87-9.84	90	4½	95	59	-
51	448 (7)	S	11	9	85	5	82	49	-
52	449 (7)	S	12	9	85	5	82	49	-
53	450	S	12	7.87-9.84	90	6	95	59	-
54	451	S	23	7.87-9.84	95	12	95	53	-
55	501(2)	S	12	7.87-9.84	85	4	95	59	-
56	625	S	20	8	40	7	30	-	321

US units: pressure psi; distance inches; powder lb/h; gas consumption ft³/h. Flow columns are instrument scales, not volumetric flow. D.E. = deposition efficiency. Numbers in parentheses refer to the accompanying numbered notes.

Standard table notes

NOTES 1-10 | TECHNICAL NOTES RETAINED AND QUALIFIED

1. Use the matched four-jet siphon plug and cooling cap, except where the approved job sheet specifies another arrangement. Gun-cooling air reference: 15 psi (1.03 bar).

2. Auxiliary air-jet assembly: intersection and air pressure require job-specific confirmation.

3. Inspect for deposit on the nozzle tip during extended spraying. Shut down, isolate and cool before cleaning.

4. Pinch/cool cap orientation must match the job. Gun-cooling air settings are separate from acetylene settings.

5. Auxiliary air-jet arrangement and intersection distance must be qualified with the selected powder.

6. Preheat temperature: obtain the powder-specific approved limit before operation.

7. Alternative feed wheels require feeder compatibility checks and mass-feed calibration.

8. For cooling-side-out cap operation, confirm the cap's approved air pressure separately.

9. Adjust powder delivery only within the approved process window and verify coating quality.

10. Abradable coatings require a qualified material-specific procedure.

Standard table notes

NOTES 11-19 | TECHNICAL NOTES RETAINED AND QUALIFIED

11. Set gas pressure and meter reading with the installed instrument's calibration; do not apply an assumed pressure correction.

12. Stop and investigate an unstable flame, backfire or abnormal jet behaviour.

13. Auxiliary air-jet pressure and intersection are job-specific; obtain the approved values.

14. Vibrator pressure requires confirmation against the vibrator rating.

15. Confirm cooling-jet pressure and placement before spraying.

16. Where a 20 psi vibrator setting is specified, its equivalent is 1.38 bar; verify the equipment rating.

17. Calibrate actual powder mass feed. RPM alone is not a transferable delivery rate.

18. Auxiliary jet configurations must not be interchanged without process approval.

19. Confirm the full powder grade, suffix and composition; similar codes do not establish equivalence.

Table 2 High rate US

PANEL A | ROWS 1-25

K/M operating values updated. Select the correct powder and nozzle; validate the complete job recipe before production. TBC = technical confirmation required.

No.	Powder / notes	Nozzle	O2 press.	Fuel press.	O2 scale	Fuel scale	N2 press.	N2 scale
1	12C	P7C-K	30	14.50	42	50	55	37
2	14E	P7C-K	30	14.50	42	50	55	37
3	15E	P7C-K	30	14.50	42	50	55	37
4	16C	P7C-K	30	14.50	42	50	55	37
5	18C	P7C-K	30	14.50	42	50	55	37
6	19E	P7C-K	30	14.50	42	50	55	37
7	31C-NS	P7C-K	30	14.50	42	50	55	37
8	32C	P7C-K	30	14.50	42	50	55	37
9	35C	P7C-K	30	14.50	42	50	55	37
10	36C	P7C-K	30	14.50	42	50	55	37
11	307NS (3)(4)(5)	P7C-K	35	14.50	46	52	55	37
12	308NS (3)(4)(5)	P7C-K	30	14.50	42	50	55	37
13	309 NS(3)(4)(5)	P7C-K	20	14.50	38	56	55	37
14	442	P7C-K	30	14.50	42	50	55	37
15	443	P7C-K	30	14.50	42	50	55	37
16	444	P7C-K	30	14.50	42	50	55	37
17	445(9)	P7C-K	30	14.50	42	50	55	37
18	447	P7C-K	30	14.50	42	50	55	37
19	448	P7C-K	30	14.50	42	50	55	37
20	449	P7C-K	30	14.50	42	50	55	37
21	450	P7C-K	30	14.50	42	50	55	37
22	450-13(3)(4)(5)	P7C-K	30	14.50	42	50	55	37
23	450-14(3)(4)(5)	P7C-K	30	14.50	42	50	55	37
24	450-15(3)(4)(5)]	P7C-K	20	14.50	38	44	55	37
25	450-17(3)(4)(5)(7)	P7C-K	20	14.50	40	46	55	37

US units: pressure psi; distance inches; powder lb/h; gas consumption ft³/h. Flow columns are instrument scales, not volumetric flow. D.E. = deposition efficiency. Numbers in parentheses refer to the accompanying numbered notes.

Table 2 High rate US

PANEL B | ROWS 1-25

K/M operating values updated. Select the correct powder and nozzle; validate the complete job recipe before production. TBC = technical confirmation required.

No.	Powder / notes	Wheel	RPM	Distance	D.E. %	Powder rate	O2 cons.	Fuel cons.
1	12C	S	45	7.87-9.84	90	35	82	49
2	14E	S	45	7.87-9.84	90	35	82	49
3	15E	S	50	7.87-9.84	95	35	82	49
4	16C	S	45	7.87-9.84	95	35	82	49
5	18C	S	50	7.87-9.84	95	35	82	49
6	19E	S	50	7.87-9.84	95	35	82	49
7	31C-NS	S	45	7.87-9.84	95	28	82	49
8	32C	S	25	7.87-9.84	80	18	82	49
9	35C	H	25	7.87-9.84	90	28	82	49
10	36C	S	40	7.87-9.84	85	28	82	49
11	307NS (3)(4)(5)	H	50	7.87-9.84	70	16	93	51
12	308NS (3)(4)(5)	H	45	7.87-9.84	80	24	82	49
13	309 NS(3)(4)(5)	H	45	7.87-9.84	80	16	64	40
14	442	S	20	7.87-9.84	85	10	82	49
15	443	S	30	7.87-9.84	80	15	82	49
16	444	S	30	7.87-9.84	85	15	82	49
17	445(9)	S	20	7.87-9.84	90	10	82	49
18	447	S	30	7.87-9.84	90	15	82	49
19	448	S	20	7.87-9.84	85	10	82	49
20	449	S	20	7.87-9.84	90	10	82	49
21	450	S	20	7.87-9.84	90	15	82	49
22	450-13(3)(4)(5)	S	50	7.87-9.84	85	30	82	49
23	450-14(3)(4)(5)	H	40	7.87-9.84	75	40	82	49
24	450-15(3)(4)(5)]	TBC	50	7.87-9.84	75	30	64	35
25	450-17(3)(4)(5)(7)	H	40	7.87-9.84	35	40	71	40

US units: pressure psi; distance inches; powder lb/h; gas consumption ft³/h. Flow columns are instrument scales, not volumetric flow. D.E. = deposition efficiency. Numbers in parentheses refer to the accompanying numbered notes.

High rate table notes

NOTES 1-10 | TECHNICAL NOTES RETAINED AND QUALIFIED

1. Use the matched siphon plug and cooling cap; gun-cooling air reference 15 psi, subject to equipment rating.

2. Acetylene: 1.00 bar (14.50 psi). Use the installed flowmeter calibration; do not apply assumed pressure reductions.

3. Confirm the surface-preparation and bond-coat specification for the selected powder.

4. Powder mass rate and spray distance affect hardness, abradability and erosion resistance. Qualify them together.

5. Maximum substrate temperature requires powder-specific technical confirmation.

6. Temperature-sensitive substrates require a separately approved lower temperature limit.

7. Confirmed K/M spray distance: 200-250 mm, measured along the spray stream. Approve the spray angle for the job.

8. Set and measure the required powder mass rate. For the confirmed 35 lb/h rows, use 15.88 kg/h.

9. For cooling-side-out cap operation at 20 psi, the equivalent is 1.38 bar; verify cap and equipment limits.

10. Confirm full powder identity and suffix before selecting a recipe.

Table 3 Standard metric

PANEL A | ROWS 1-28

K/M operating values updated. Select the correct powder and nozzle; validate the complete job recipe before production. TBC = technical confirmation required.

No.	Powder / notes	Nozzle	O2 press.	Fuel press.	H2 press.	O2 scale	Fuel scale	H2 scale	N2 press.	N2 scale
1	12C	P7C -M	2.2	1.00	-	45	55	-	3.79	37
2	14E	P7C -M	2.2	1.00	-	45	56	-	3.79	37
3	15E	P7C -M	2.2	1.00	-	45	55	-	3.79	37
4	15E	P7C -MH	2.1	-	1.6	40	-	50	3.79	40
5	16C	P7C -M	2.2	1.00	-	45	55	-	3.79	37
6	TBC code	P7C -M	2.2	1.00	-	45	55	-	3.79	37
7	19E	P7C -M	2.2	1.00	-	45	55	-	3.79	37
8	31C-NS	P7C -M	2.2	1.00	-	45	55	-	3.79	37
9	36C	P7C -M	2.2	1.00	-	45	55	-	3.79	37
10	41C	P7C -M	2.2	1.00	-	45	55	-	3.79	37
11	41F-NS	P7C -MH	1.7		1.6	35	-	60	3.79	37
12	42C	P7C -M	2.2	1.00	-	45	55	-	3.79	37
13	43C	P7C -M	2.2	1.00	-	45	55	-	3.79	37
14	43F-NS	P7C -MH	1.9		1.9	35	-	70	3.79	37
15	44	P7C -M	2.2	1.00	-	45	55	-	3.79	37
16	45C-NS	P7C -M	1.8	1.00	-	40	60	-	3.79	37
17	51	P7C -M	2.2	1.00	-	45	55	-	3.79	37
18	52C- NS(5)	P7C -MH	2.8		2.1	43	-	65	3.79	37
19	54 (4)	P7C -MH	1.4		1.4	30	-	60	3.79	40
20	55	P7C -MH	2.6		2.4	40	-	75	3.79	40
21	56C-NS	P7C -M	2.2	1.00	-	45	55	-	3.79	37
22	75F(4)(13)	P7C -D	2.1	1.0	-	35	45	-	3.79	37
23	91	P7C -M	2.2	1.00	-	45	55	-	3.79	37
24	101 (15)(16)	P7C -K	2.1	1.00	-	42	50	-	3.79	37
25	101FP (16)(18)	P7C -K	2.1	1.00	-	42	50	-	3.79	37
26	101SF (14)(18)	P7C -D	2.1	1.0	-	42	50	-	3.79	37
27	102 (16)(18)	P7C -K	2.1	1.00	-	42	50	-	3.79	37
28	105 (16)(18)	P7C -K	2.1	1.00	-	42	50	-	3.79	37

Metric units: pressure bar; distance mm; powder kg/h; gas consumption m³/h. TBC values must be confirmed before use. Flow columns are instrument scales, not volumetric flow. D.E. = deposition efficiency. Numbers in parentheses refer to the accompanying numbered notes.

Table 3 Standard metric

PANEL B | ROWS 1-28

K/M operating values updated. Select the correct powder and nozzle; validate the complete job recipe before production. TBC = technical confirmation required.

No.	Powder / notes	Wheel	RPM	Distance	D.E. %	Powder rate	O2 cons.	Fuel cons.	H2 cons.
1	12C	S	30	200-250	95	9.1	2.7	1.7	-
2	14E	S	35	200-250	95	9.1	2.7	1.7	-
3	15E	S	35	200-250	95	9.1	2.7	1.7	-
4	15E	S	37	180	95	9.1	2.2	-	7.0
5	16C	S	35	200-250	95	9.1	2.7	1.7	-
6	TBC code	S	33	200-250	95	8.2	2.7	1.7	-
7	19E	S	25	200-250	95	7.3	2.7	1.7	-
8	31C-NS	S	32	200-250	90	7.3	2.7	1.7	-
9	36C	S	30	200-250	85	TBC	TBC	1.7	-
10	41C	S	38	200-250	95	4.5	2.7	-	7.0
11	41F-NS	S	39	155	90	4.5	2.7	1.7	-
12	42C	S	25	200-250	95	4.5	1.8	1.7	-
13	43C	S	22	200-250	90	5.4	2.7	-	8.8
14	43F-NS	S	27	180	90	6.5	2.1	1.7	-
15	44	S	34	200-250	85	4.5	2.7	1.8	-
16	45C-NS	S	15	200-250	90	6.4	2.7	1.7	-
17	51	S	28	200-250	95	2.3	1.3	-	8.5
18	52C- NS(5)	S	25	180	85	1.8	2.3	-	6.9
19	54 (4)	S	29	115	80	5.4	2.7	-	10.5
20	55	S	20	205	95	4.5	1.7	1.7	-
21	56C-NS	S	20	200-250	90	4.1-4.5	2.7	1.3	-
22	75F(4)(13)	S	15	205	80	4.5	2.2	1.7	-
23	91	S	30	200-250	95	4.5	2.2	1.3	-
24	101 (15)(16)	S	15	200-250	40	0.9	2.2	1.3	-
25	101FP (16)(18)	S	15	200-250	40	0.9	2.2	1.3	-
26	101SF (14)(18)	H	15	75	50	0.7	2.2	1.3	-
27	102 (16)(18)	S	15	200-250	55	1.3	2.2	1.3	-
28	105 (16)(18)	S	15	200-250	30	1.1	2.2	1.3	-

Metric units: pressure bar; distance mm; powder kg/h; gas consumption m³/h. TBC values must be confirmed before use. Flow columns are instrument scales, not volumetric flow. D.E. = deposition efficiency. Numbers in parentheses refer to the accompanying numbered notes.

Table 3 Standard metric

PANEL A | ROWS 29-56

K/M operating values updated. Select the correct powder and nozzle; validate the complete job recipe before production. TBC = technical confirmation required.

No.	Powder / notes	Nozzle	O2 press.	Fuel press.	H2 press.	O2 scale	Fuel scale	H2 scale	N2 press.	N2 scale
29	105SFP(14)(18)	P7C -D	2.1	1.0	-	42	50	-	3.79	37
30	106 (16)(18)	P7C -K	2.1	1.00	-	42	50	-	3.79	30
31	106F(16)(18)	P7C -K	2.1	1.00	-	42	50	-	3.79	30
32	110 (16)(18)	P7C -K	2.1	1.00	-	42	50	-	3.79	37
33	111 (16)(18)	P7C -K	2.1	1.00	-	42	50	-	3.79	37
34	130 (16)(18)	P7C -K	2.1	1.00	-	42	50	-	3.79	37
35	130SF (14)(18)	P7C -K	2.1	1.00	-	42	50	-	3.79	37
36	131 VF(14)(18)	P7C -D	2.1	1.0	-	42	50	-	3.79	37
37	136 F (16)(18)	P7C -D	2.1	1.0	-	42	50	-	3.79	37
38	201 (16)(18)	P7C -D	2.1	1.0	-	42	50	-	3.79	37
39	210 (16)	P7C -K	2.1	1.00	-	42	50	-	3.79	37
40	211 (16)	P7C -K	2.1	1.00	-	42	50	-	3.79	37
41	212 F- NS	P7C -D	2.2	1.0	-	42	50	-	3.79	40
42	350	P7C -M	2.2	1.00	-	45	55	-	3.79	37
43	351	P7C -M	2.2	1.00	-	45	55	-	3.79	37
44	438 NS-1(2)(3)	P7C -D	1.7	1.0	-	40	55	-	3.79	40
45	439 NS-1(2)(3)	P7C -D	1.7	1.0	-	40	55	-	3.79	40
46	442 (6)(7)	P7C -D	1.7	1.0	-	42	50	-	3.79	37
47	443	P7C -M	2.2	1.00	-	45	55	-	3.79	37
48	444 (7)	P7C -D	1.7	1.0	-	42	50	-	3.79	37
49	445 (8)	P7C -M	2.2	1.00	-	45	55	-	3.79	37
50	447 (7)	P7C -M	2.2	1.00	-	45	55	-	3.79	37
51	448 (7)	P7C -D	1.7	1.0	-	42	50	-	3.79	37
52	449 (7)	P7C -D	1.7	1.0	-	42	50	-	3.79	37
53	450	P7C -M	2.2	1.00	-	45	55	-	3.79	37
54	451	P7C -M	2.2	1.00	-	45	55	-	3.79	37
55	501(2)	P7C -M	2.2	1.00	-	45	55	-	3.79	37
56	625	P7C-D	2.5	-	1.7	18	-	73	3.79	37

Metric units: pressure bar; distance mm; powder kg/h; gas consumption m³/h. TBC values must be confirmed before use. Flow columns are instrument scales, not volumetric flow. D.E. = deposition efficiency. Numbers in parentheses refer to the accompanying numbered notes.

Table 3 Standard metric

PANEL B | ROWS 29-56

K/M operating values updated. Select the correct powder and nozzle; validate the complete job recipe before production. TBC = technical confirmation required.

No.	Powder / notes	Wheel	RPM	Distance	D.E. %	Powder rate	O2 cons.	Fuel cons.	H2 cons.
29	105SFP(14)(18)	H	10	75	70	0.9	2.2	1.3	-
30	106 (16)(18)	S	15	200-250	20	0.9	2.2	1.3	-
31	106F(16)(18)	L	45	200-250	25	0.9	2.2	1.3	-
32	110 (16)(18)	S	15	200-250	35	0.9	2.2	1.3	-
33	111 (16)(18)	S	15	200-250	25	0.9	2.2	1.3	-
34	130 (16)(18)	S	15	200-250	35	0.9	2.2	1.3	-
35	130SF (14)(18)	S	15	200-250	40	0.9	2.2	1.3	-
36	131 VF(14)(18)	H	15	75	70	0.9	2.2	1.3	-
37	136 F (16)(18)	S	15	65	45	0.9	2.2	1.3	-
38	201 (16)(18)	L	35	75	20	0.9	2.2	1.3	-
39	210 (16)	S	15	200-250	65	0.9	2.2	1.3	-
40	211 (16)	S	15	200-250	90	0.9	2.2	1.3	-
41	212 F- NS	S	24	150	50	5.4	2.3	1.4	-
42	350	S	15	200-250	90	TBC	2.7	1.7	-
43	351	S	16	200-250	90	TBC	2.7	1.7	-
44	438 NS-1(2)(3)	S	23	90	75	3.2	2.1	1.6	-
45	439 NS-1(2)(3)	S	15	90	85	2.7	2.1	1.6	-
46	442 (6)(7)	S	12	255	85	2.3	2.3	1.4	-
47	443	S	12	200-250	80	2.7	2.7	1.7	-
48	444 (7)	S	12	230	85	2.3	2.3	1.4	-
49	445 (8)	S	12	200-250	90	2.3	2.7	1.7	-
50	447 (7)	S	10	200-250	90	2.0	2.7	1.7	-
51	448 (7)	S	11	230	85	2.3	2.3	1.4	-
52	449 (7)	S	12	230	85	2.3	2.3	1.4	-
53	450	S	12	200-250	90	2.7	2.7	1.7	-
54	451	S	23	200-250	95	5.4	2.7	1.7	-
55	501(2)	S	12	200-250	85	1.8	2.7	1.7	-
56	625	S	20	200	40	3.2	1.1	-	911

Metric units: pressure bar; distance mm; powder kg/h; gas consumption m³/h. TBC values must be confirmed before use. Flow columns are instrument scales, not volumetric flow. D.E. = deposition efficiency. Numbers in parentheses refer to the accompanying numbered notes.

Table 4 High rate metric

PANEL A | ROWS 1-25

K/M operating values updated. Select the correct powder and nozzle; validate the complete job recipe before production. TBC = technical confirmation required.

No.	Powder / notes	Nozzle	O2 press.	Fuel press.	O2 scale	Fuel scale	N2 press.	N2 scale
1	12C	P7C-K	2.1	1.00	42	50	3.79	37
2	14E	P7C-K	2.1	1.00	42	50	3.79	37
3	15E	P7C-K	2.1	1.00	42	50	3.79	37
4	16C	P7C-K	2.1	1.00	42	50	3.79	37
5	18C	P7C-K	2.1	1.00	42	50	3.79	37
6	19E	P7C-K	2.1	1.00	42	50	3.79	37
7	31C-NS	P7C-K	2.1	1.00	42	50	3.79	37
8	32C	P7C-K	2.1	1.00	42	50	3.79	37
9	35C	P7C-K	2.1	1.00	42	50	3.79	37
10	36C	P7C-K	2.1	1.00	42	50	3.79	37
11	307NS (3)(4)(5)	P7C-K	2.4	1.00	46	50	3.79	37
12	308NS (3)(4)(5)	P7C-K	2.1	1.00	42	50	3.79	37
13	309 NS(3)(4)(5)	P7C-K	2.1	1.00	38	56	3.79	37
14	442	P7C-K	2.1	1.00	42	50	3.79	37
15	443	P7C-K	2.1	1.00	42	50	3.79	37
16	444	P7C-K	2.1	1.00	42	50	3.79	37
17	445(9)	P7C-K	2.1	1.00	42	50	3.79	37
18	447	P7C-K	2.1	1.00	42	50	3.79	37
19	448	P7C-K	2.1	1.00	42	50	3.79	37
20	449	P7C-K	2.1	1.00	42	50	3.79	37
21	450	P7C-K	2.1	1.00	42	50	3.79	37
22	450-13(3)(4)(5)	P7C-K	2.1	1.00	42	50	3.79	37
23	450-14(3)(4)(5)	P7C-K	2.1	1.00	42	50	3.79	37
24	450-15(3)(4)(5)]	P7C-K	1.4	1.00	38	44	3.79	37
25	450-17(3)(4)(5)(7)	P7C-K	1.4	1.00	40	46	3.79	37

Metric units: pressure bar; distance mm; powder kg/h; gas consumption m³/h. TBC values must be confirmed before use. Flow columns are instrument scales, not volumetric flow. D.E. = deposition efficiency. Numbers in parentheses refer to the accompanying numbered notes.

Table 4 High rate metric

PANEL B | ROWS 1-25

K/M operating values updated. Select the correct powder and nozzle; validate the complete job recipe before production. TBC = technical confirmation required.

No.	Powder / notes	Wheel	RPM	Distance	D.E. %	Powder rate	O2 cons.	Fuel cons.
1	12C	S	45	200-250	90	15.88	2.32	TBC
2	14E	S	45	200-250	90	15.88	2.32	TBC
3	15E	S	50	200-250	95	15.88	2.32	TBC
4	16C	S	45	200-250	95	15.88	2.32	TBC
5	18C	S	50	200-250	95	15.88	2.32	TBC
6	19E	S	50	200-250	95	15.88	2.32	TBC
7	31C-NS	S	45	200-250	95	TBC	2.32	TBC
8	32C	S	25	200-250	80	TBC	2.32	TBC
9	35C	H	25	200-250	90	TBC	2.32	TBC
10	36C	S	40	200-250	85	TBC	2.32	TBC
11	307NS (3)(4)(5)	H	50	200-250	70	TBC	TBC	TBC
12	308NS (3)(4)(5)	H	45	200-250	80	TBC	2.32	TBC
13	309 NS(3)(4)(5)	H	45	200-250	80	TBC	TBC	TBC
14	442	S	20	200-250	85	TBC	2.32	TBC
15	443	S	30	200-250	80	TBC	2.32	TBC
16	444	S	30	200-250	85	TBC	2.32	TBC
17	445(9)	S	20	200-250	90	TBC	2.32	TBC
18	447	S	30	200-250	90	TBC	2.32	TBC
19	448	S	20	200-250	85	TBC	2.32	TBC
20	449	S	20	200-250	90	TBC	2.32	TBC
21	450	S	20	200-250	90	TBC	2.32	TBC
22	450-13(3)(4)(5)	S	50	200-250	85	TBC	2.32	TBC
23	450-14(3)(4)(5)	H	40	200-250	75	TBC	2.32	TBC
24	450-15(3)(4)(5)]	TBC	50	200-250	75	TBC	TBC	TBC
25	450-17(3)(4)(5)(7)	H	40	200-250	35	TBC	TBC	TBC

Metric units: pressure bar; distance mm; powder kg/h; gas consumption m³/h. TBC values must be confirmed before use. Flow columns are instrument scales, not volumetric flow. D.E. = deposition efficiency. Numbers in parentheses refer to the accompanying numbered notes.